104191LE

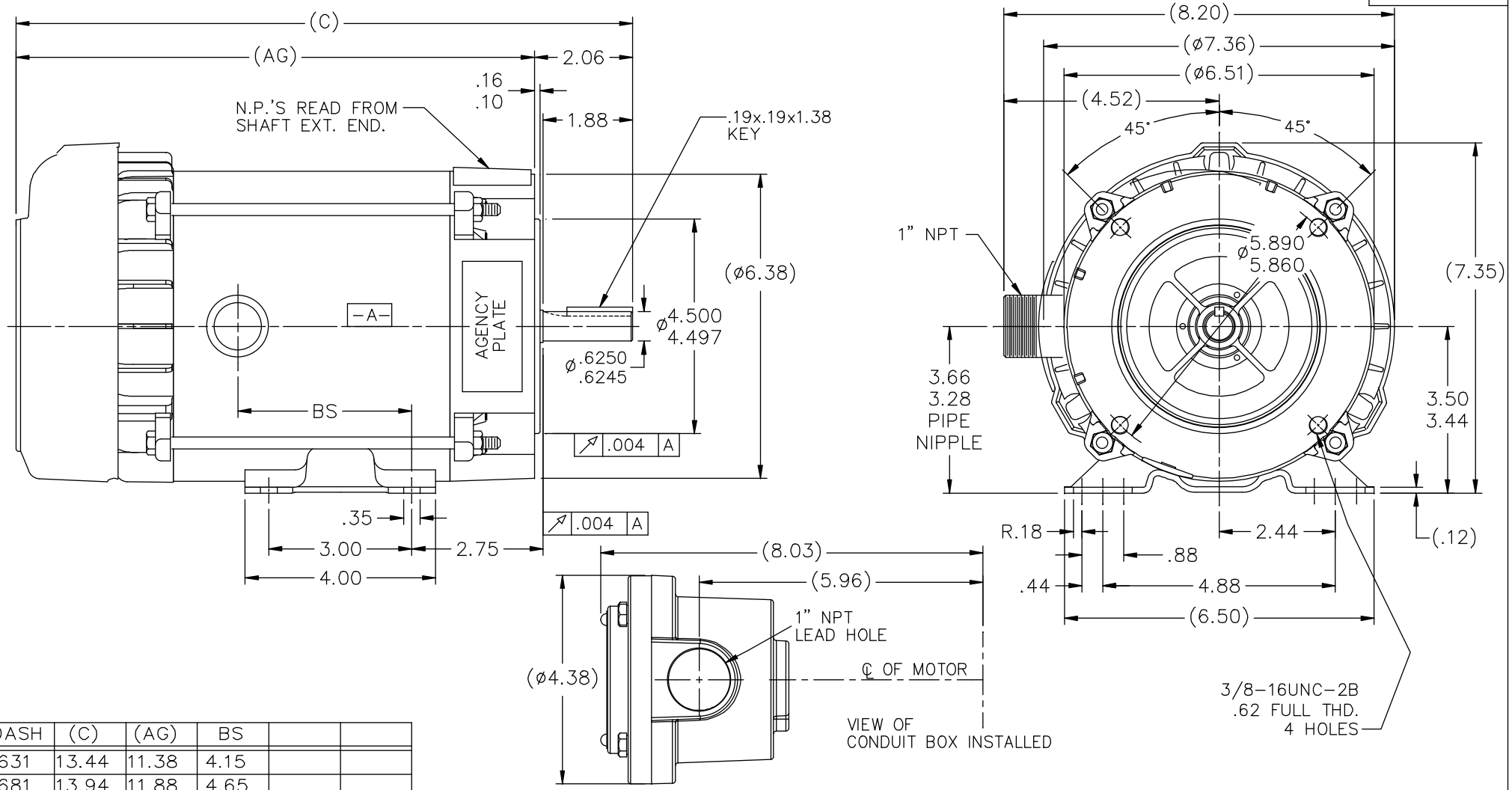

DASH	(C)	(AG)	BS		
631	13.44	11.38	4.15		
681	13.94	11.88	4.65		
731	14.44	12.38	5.15		
781	14.94	12.88	5.65		
831	15.44	13.38	6.15		
881	15.94	13.88	6.65		
931	16.44	14.38	7.15		
981	16.94	14.88	7.65		

NO.	REVISION	BY & DATE	CHK
3	COND. BOX INSTALLED VIEW UPDATED PER ECR-0044571	UD 10/15/13	ST
2	REVISED C'BOX PER CN 40784A	JJB 02/26/2007	ML
1	NEW DRAWING	HLB 05-31-2002	

TOLERANCES UNLESS SPECIFIED

DEC.	INCHES
.X	±.1
.XX	±.03
.XXX	±.005
.XXXX	±.0005
ANG	±1/2°

LEESON — ELECTRIC MOTORS GEARMOTORS AND DRIVES

TITLE OUTLINE - 'C' FACE 56 FR. - EXP. PR.

MAT'L.

FINISH

CAD FILE 104191LE

RFP

DIST WP

DRAWN HLB 05-29-2002
CHK ML 05-31-2002
APPD SAS 05-31-2002
SCALE 1=2
REF
FMF
PREV

SIZE B | DRAWING NO. 104191LE | PAGE OF | REV. 3